A 40mm Ø 8mm x60 C x 32 E x12 G 16mm x20 J x4 L 30mm x72

B 110 mm x 30 D Ø 10mm x4 F x4 I 32 mm x12 K 70mm x4 M x2

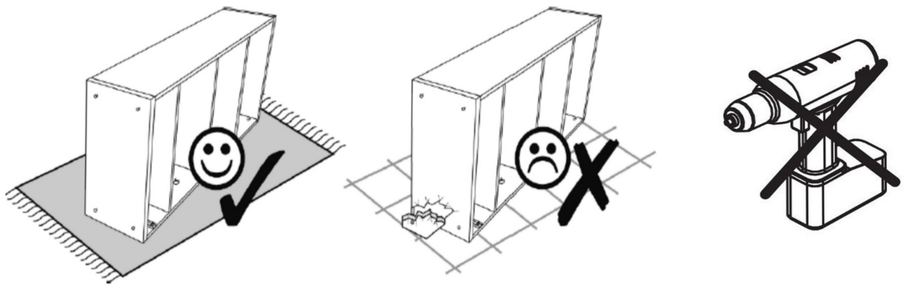

1.

2x

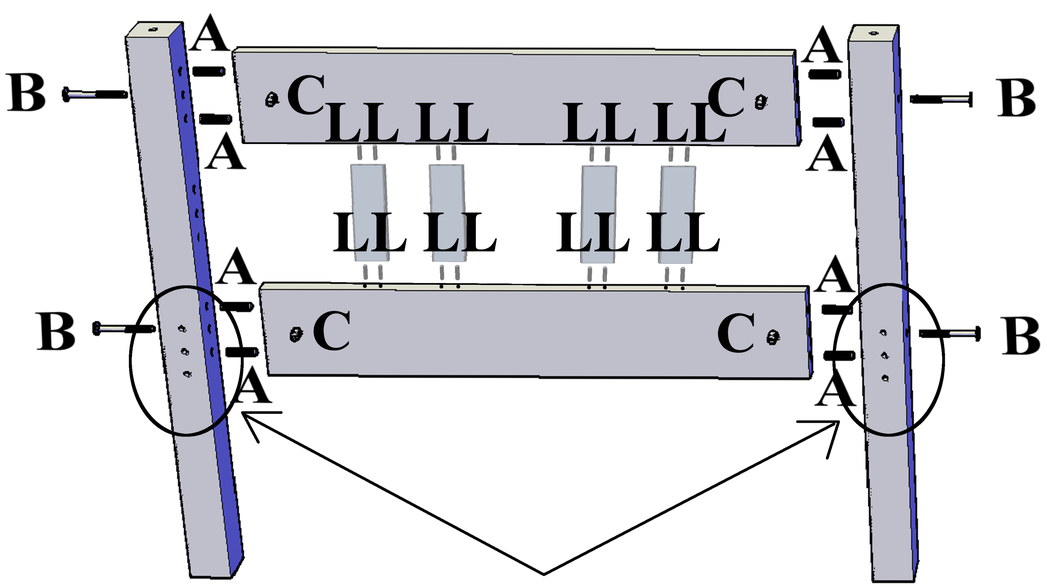

2.

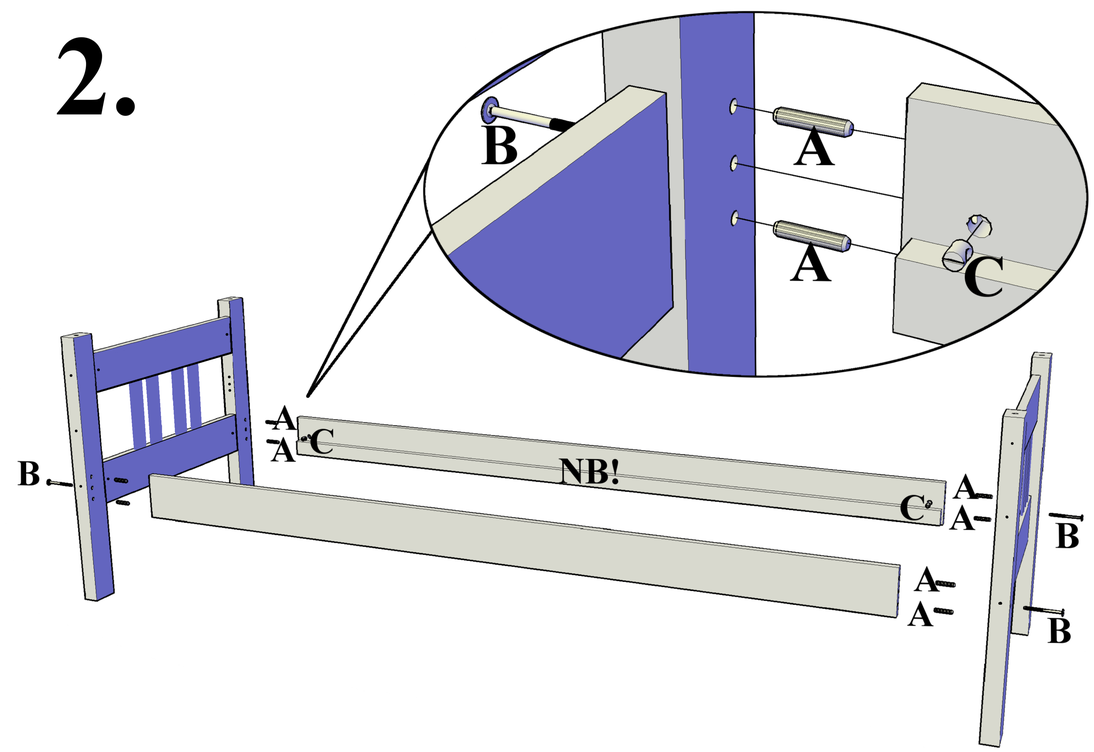

3.

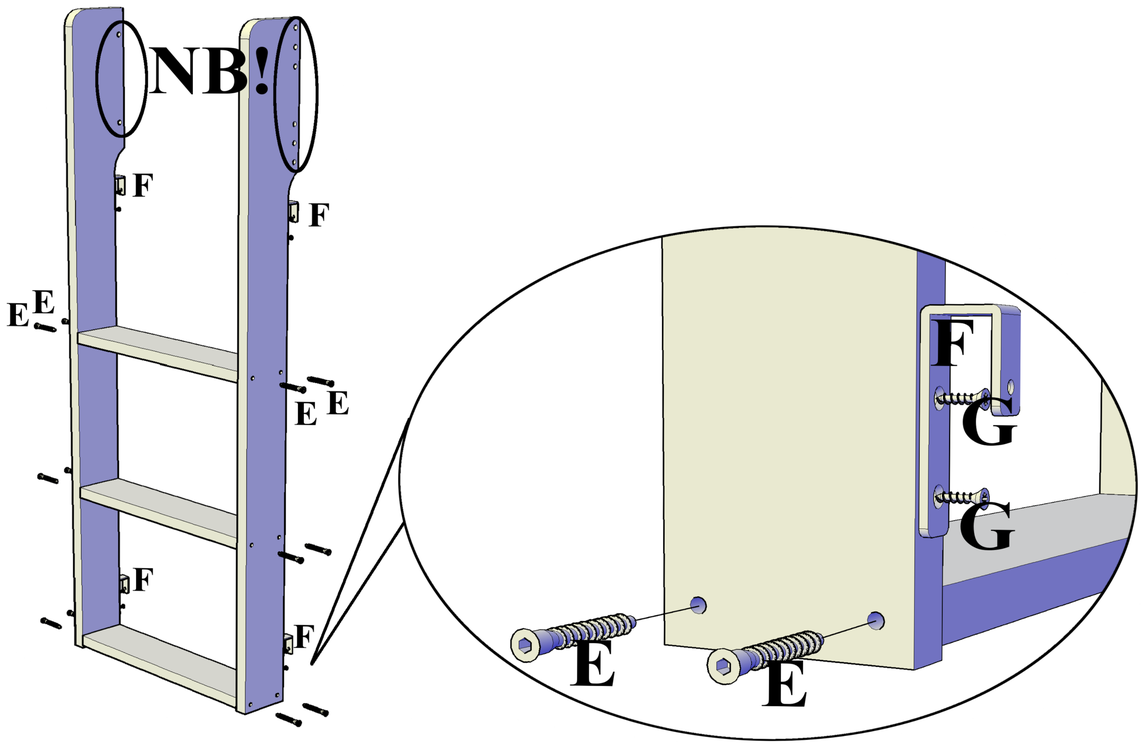
NB!
F
F
E E
E E
F
F
F
G
G
E
E

4.

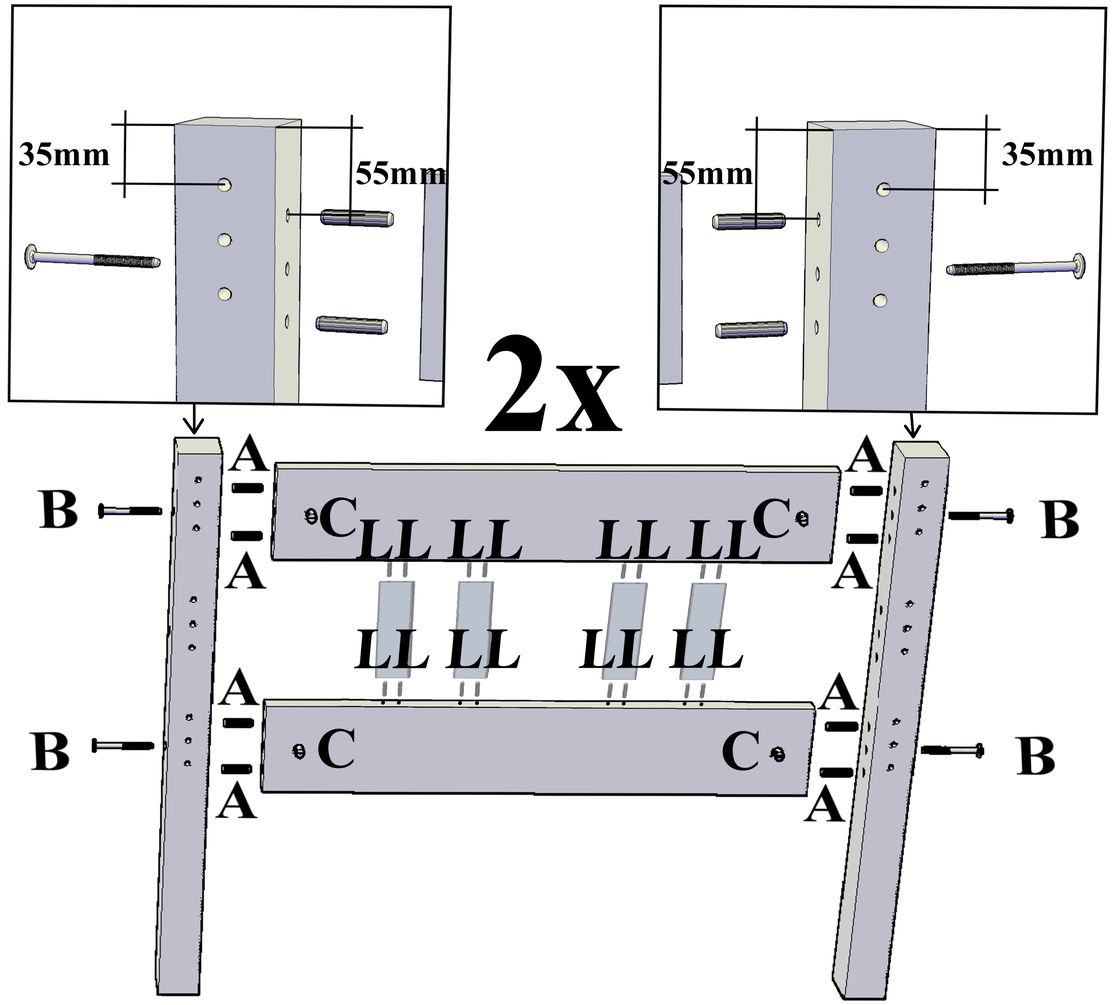
35mm
55mm
55mm
35mm
2x
A
A
B
B
C
C
LL LL LL LL
LL LL LL LL
A
A
B
B
C
C

5.

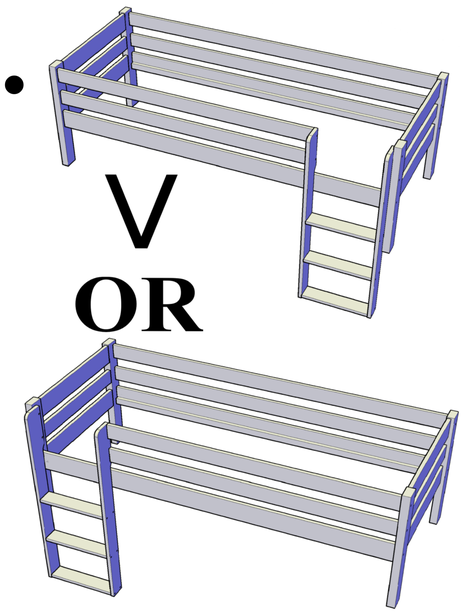
V
OR

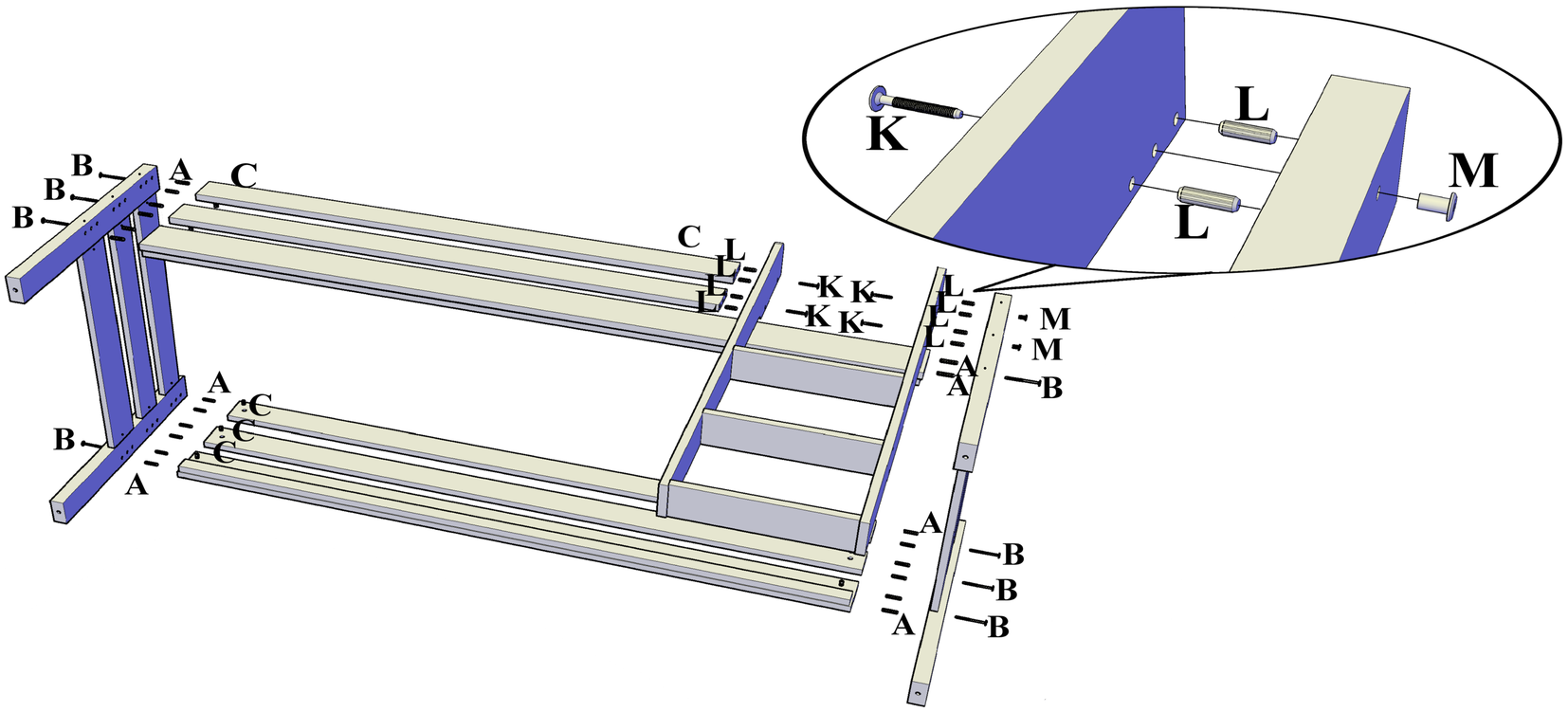
K
L
L
M
B
B
B
A
C
C
L
L
L
L
K K
K K
L
L
L
M
M
A
A
B
A
C
C
C
B
A
A
B
B
A
B
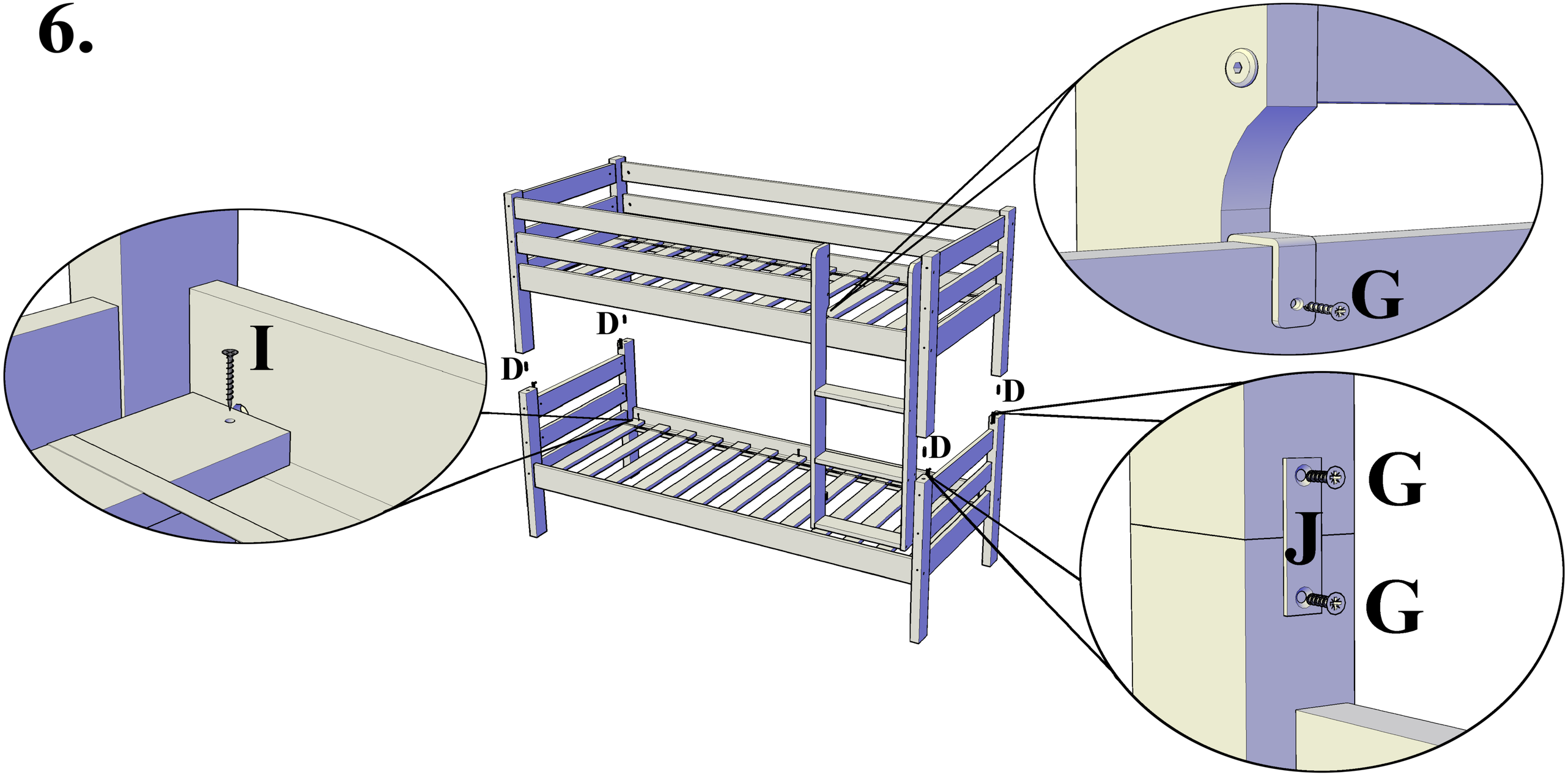
6.